K9K

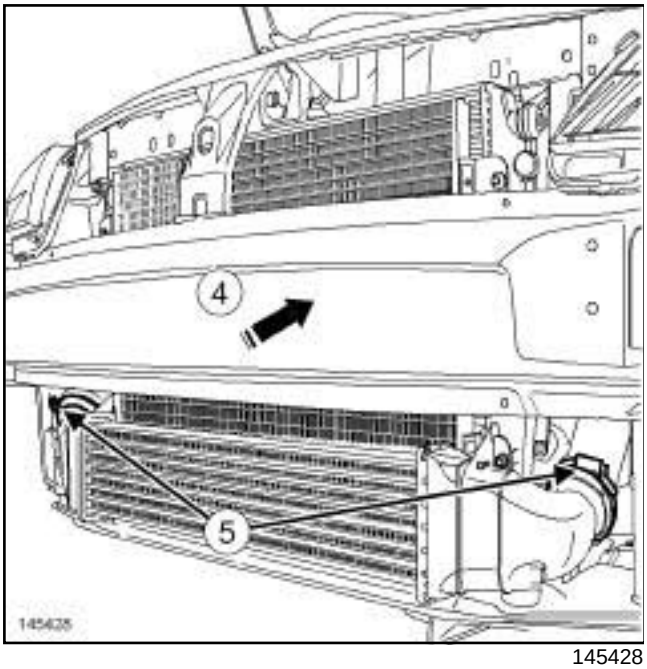

145428

- Push the « radiator - fan » assembly in the direction of the arrow (**4**) in order to remove the intercooler.
- Remove the clips (**5**) of the intercooler ducts.
- Disconnect the intercooler ducts.

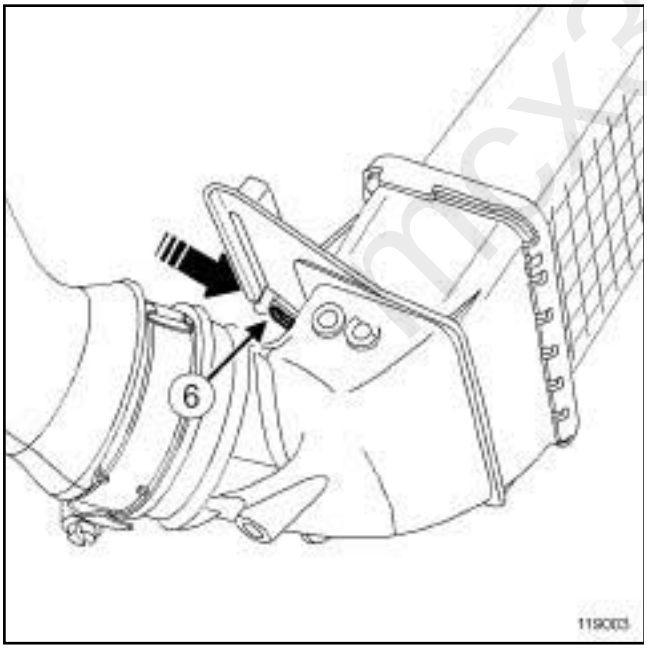

119003

- Press the end piece of the intercooler mounting at (**6**) , in the direction of the arrow, to unclip it.

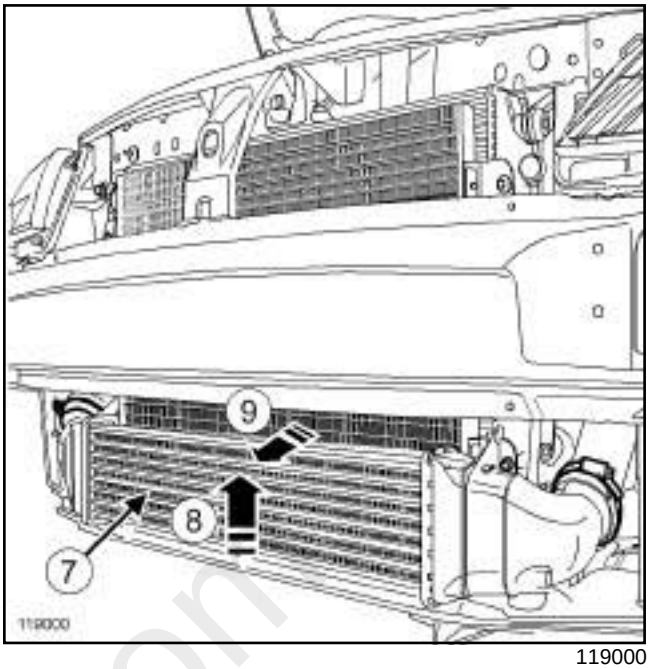

119000

- Remove the intercooler (**7**) in the direction of the arrows (**8**) then (**9**) .

REFITTING

I - REFITTING PREPARATION OPERATION

- Check that the intercooler is not full of oil. If this is the case, clean it with a cleaning agent and then let it dry.

II - REFITTING OPERATION

- Proceed in the reverse order to removal.

K4M

Operating diagram of the fuel supply circuit (« pump - sender - fuel filter » assembly)

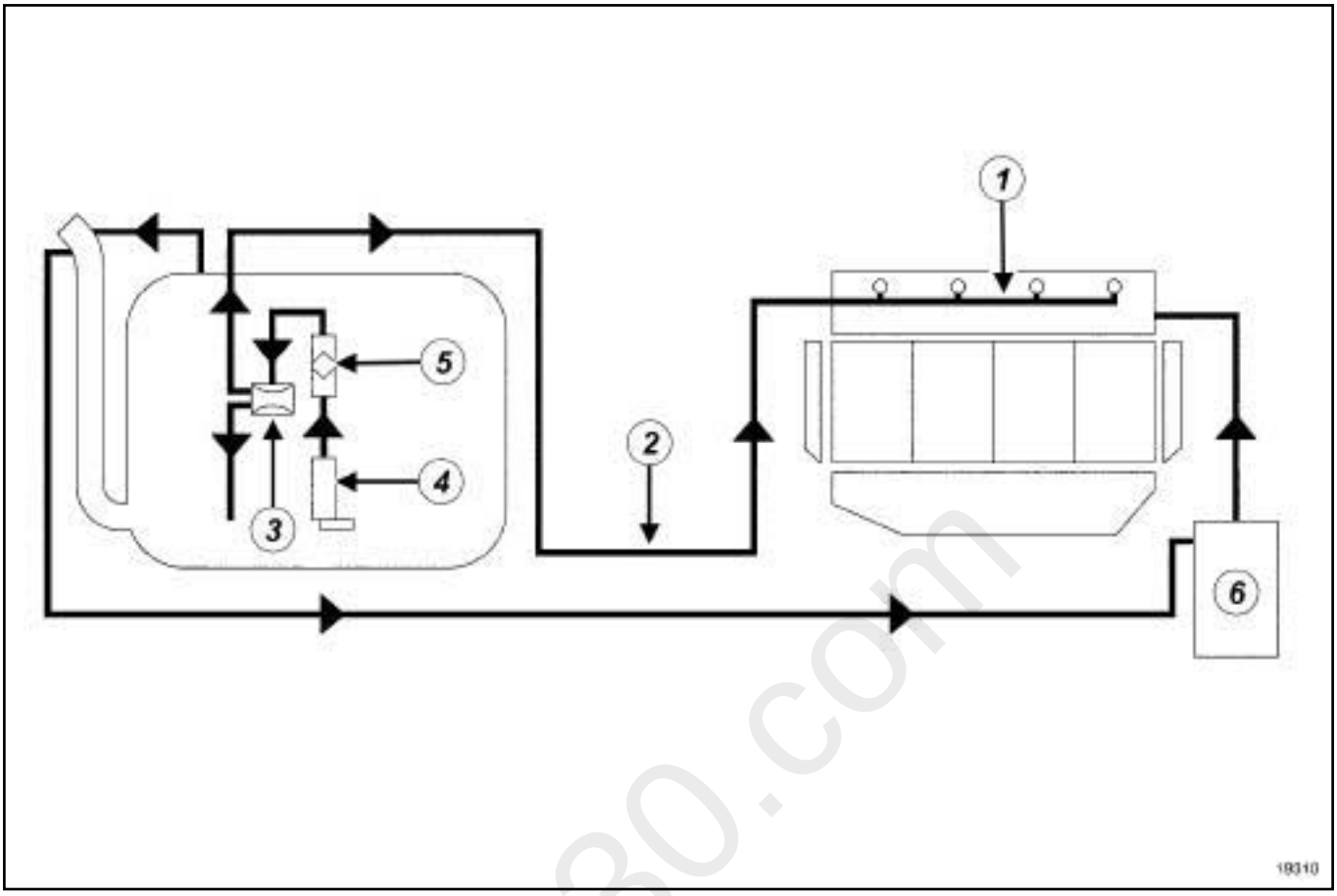

19310

The fuel supply circuit does not have a return.

The fuel pressure does not vary with engine load.

The circuit comprises:

- a rail (**1**) without a return pipe and without a supply pressure regulator,
- a single pipe (**2**) coming from the tank,
- a « pump-sender-fuel filter » assembly fitted with the pressure regulator (**3**) , the pump (**4**) and the fuel filter (**5**) (all located in the tank),
- a fuel vapour recirculation tank (**6**) .

mcx30.com